Electrolux PROFESSIONAL

Modular Cooking Range Line 700XP 2 Hot Plate Electric Induction Cooking Top HP

ITEM #

MODEL #

NAME #

SIS #

AIA #

371175 (E7INED200P) 2 zone hot plate electric induction cooking top **HP**-400V

Short Form Specification

Item No.

6 mm thick glass ceramic cooking surface with 2 independently controlled 5 kW induction zones. Induction top surface with seamless transition between individual heating zones. Exterior panels in stainless steel with Scotch Brite finish. One piece pressed work top in 1.5 mm thick stainless steel. Right-angled side edges to allow flush-fitting junction between units.

APPROVAL:

Main Features

- 6mm glass ceramic cooking surface with 2 independently controlled induction zones with a power of 5 kW per zone.
- Almost the entire surface of the ceramic plate can be used without "dead" spots.
- Indicating lamp for each zone located on control console.
- Induction plates endowed with overheating safety device.
- Power to the individual zones can be set with progressive output i.e. fine regulation at the lower and larger progress at the upper levels.
- Low heat dissipation to the kitchen.
- The smooth, glass ceramic plate is not directly heated, so there is no burning on cooking surface.
- IPx4 water protection.
- Pots diameter to be used : min 12cm, max 28 cm in order to obtain maximum heating efficiency.
- Suitable for countertop installation.

Construction

- All exterior panels in Stainless Steel with Scotch Brite finishing.
- One piece pressed 1.5 mm work top in Stainless steel.
- Model has right-angled side edges to allow flush fitting joints between units, eliminating gaps and possible dirt traps.

Sustainability

- This model is compliant with Swiss Energy Efficiency Ordinance (730.02).

Optional Accessories

- Support for bridge type installation, 800mm — PNC 206137 ❑
- Support for bridge type installation, 1000mm — PNC 206138 ❑
- Support for bridge type installation, 1200mm — PNC 206139 ❑
- Support for bridge type installation, 1400mm — PNC 206140 ❑
- Support for bridge type installation, 1600mm — PNC 206141 ❑
- Support for bridge type installation, 400mm — PNC 206154 ❑
- Water column extension for 700 line — PNC 206291 ❑
- Chimney upstand, 400mm — PNC 206303 ❑
- Chimney grid net, 400mm (700XP/900) — PNC 206400 ❑

- Scraper for ribbed plate fry tops - kit includes knife blades for both smooth and ribbed surface PNC 206420 ❑
- 2 side covering panels for top appliances PNC 216277 ❑

The company reserves the right to make modifications to the products without prior notice. All information correct at time of printing.

Modular Cooking Range Line 700XP 2 Hot Plate Electric Induction Cooking Top HP

Front

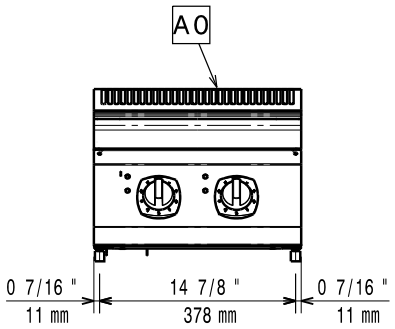

Side

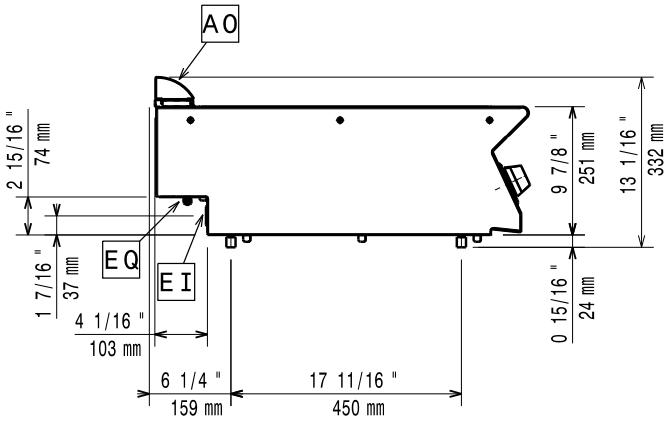

EI = Electrical inlet (power)
EQ = Equipotential screw

Top

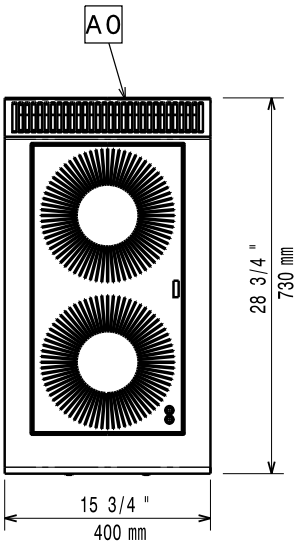

Electric

Supply voltage:	380-415 V/3 ph/50/60 Hz 380-415V 3~ 50/60Hz
Predisposed for:	10kW
Total Watts:	10 kW

Key Information:

If appliance is set up or next to or against temperature sensitive furniture or similar, a safety gap of approximately 150 mm should be maintained or some form of heat insulation fitted.

Induction compatible pots & pans must be used.

External dimensions, Width:	400 mm
External dimensions, Depth:	730 mm
External dimensions, Height:	250 mm
Net weight:	20 kg
Shipping weight:	38 kg
Shipping height:	530 mm
Shipping width:	460 mm
Shipping depth:	820 mm
Shipping volume:	0.2 m³
Certification group:	IH72P
Induction Top Dimensions (width):	400 mm
Induction Top Dimensions (depth):	730 mm

The company reserves the right to make modifications to the products without prior notice. All information correct at time of printing.